AUTOJACK USER'S MANUAL

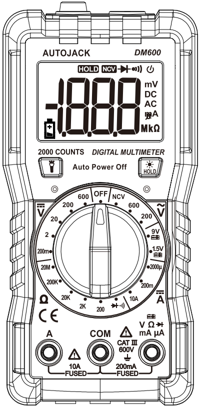

DM600 DIGITAL MULTIMETER

⚠ Before using the instrument, please read this manual carefully, and save it well for future using.

SER'S MANUAL AUTOJACK

MADE IN CHINA CE RoHS

⚠ Before using the instrument,please read this manual carefully,and save it well for future using.

Table of Contents

General 1

Schematic of Meter Appearance 2

Safety Information 3

Safety Signs 3

Cautions for Use 3

Maintenance 4

Technical Indicators................................... 4-6

Instructions for Use 7-9

Battery and Fuse Replacement 10

Accessories 10

General

The DM 600 is a high-performance, high reliability, full-featured,large-screen display handheld 3-1/2-digit multimeter. The meter sets the kernel on the integrated circuits and A/D converter, and is provided with overload protection circuit, which can be used to measure DC and AC voltage, DC current, resistance, diode, battery voltage, non-contact AC voltage sensing, and circuit continuity. It is an ideal tool for labs, factories,and electronic DIY users.

Schematic of the Meter Appearance

① NCV and continuity indicator
The NCV field is used to indicate the intensity of the induced voltage, the green LED of the Continuity field indicates the ON status when it lights up;

② Display
3-1/2-Digit large-screen display with clear reading

③ Backlight/data hold button
Press the button to enter in the data hold function, hold it down for about 2 seconds to turn on the backlight; the backlight will automatically turn off after about 1 minute, which can be manually turned off by holding down the button for 2 seconds; In the OFF field, hold down the HOLD button while turn the rotary switch to turn on the meter, which will cancel the automatic shut down function;

④ Flashlight button
When the button is pressed, the flashlight is on, and it turns off automatically after about 3 minutes. When it lights, press the button again to turn it off manually.

⑤ Function range selection knob
Turn the rotary switch to select the relevant function and measurement range;

⑥ V//Ma/μA/Diode/Battery Jack
Positive input for measurement of voltage, resistance, diode, current less than 200mA, etc. (connected to the red probe)

⑦ COM jack
The common input terminal for all measurements (connected to black probe)

⑧ 10A jack
Positive input terminal for measuring current within 10A (connected with red probe)

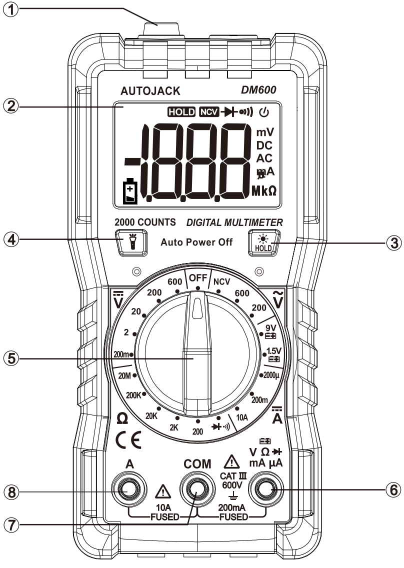

Safety Information

The DM600 Digital Multimeter is designed according to IEC61010-1 600V (CATIII) and Level 2 Pollution.

To ensure correct and safe use of the meter, please read the User Manual carefully.

Safety Signs

⚠ For important safety information, please refer to the Manual.
ϟ High voltage hazard.
🗑 Not recyclable
▣ Double insulation (Class II safety equipment).
▭ The fuse must be replaced with new one as specified in the Manual.

Cautions for Use

- The meter can only be used with the probes in the package so as to meet the safety standards. If the probes should be replaced due to damage, only those of the same type or the same electrical specifications can be used.
- Do not exceed the input limit specified for each range. While the meter being used for measurement, do not touch the unused input end.
- When you don't know what range is used for the measured object, set the function range switch to the maximum range field.
- Before switching the function range switch, the probes shall be separated from the circuit under test.
- Before performing on-line resistance measurement, it is necessary to turn off the circuit power and discharge all capacitors.
- When measuring voltages above 60Vdc or above 30V AC，be very careful to keep the fingers in the safe area of the probe.
- When measuring a TV set or switching power supply, be aware that the presence of high voltage pulses in the circuit ,which may damage the internal circuit of the meter, so please conduct the measurement with care.

Maintenance

- Before opening the back cover, the probes shall be separated from the circuit under test.
- The fuse for replacement shall have the same electrical specifications. The specifications of the fuses used in this series of meters are as follows:
  F 200mA/250V (fast fusing-off) 10A/250V (fast fusing-off)
- Do not use the meter until the back cover is properly relocated and fixed the screws.
- To clean the meter, only a damp cloth with a small amount of detergent can be used. Do not use chemical solvents to wipe the case.
- If any abnormality is observed, stop using the meter immediately and get it repaired.

Technical Indicators

Accuracy: % Reading digits, guaranteed for one year from the date of shipment.
Ambient temperature: 18°C to 28°C. Environment humidity: < 80%.

General features:

Maximum voltage to earth at the input terminal： CATIII 600V
Fuse：F 200mA/250V F10A/250V
Power supply：2×1.5V AAA batteries
Maximum display value：1999
Overrange indication：“OL”
Polarity display：Negative polarity display "-".
Automatic shutdown time：About 10 minutes
Undervoltage indication：“ 🔋 ”
Operating temperature ：0 to 40°C
Storage temperature：-10°C to 50°C.
Dimensions：150*70*50mm
Weight：195g

DC voltage

Range	Resolution	Accuracy
200mV	100μV	±0.5% of reading+2 digits
2V	1mV	±0.5% of reading+2 digits
20V	10mV	±0.5% of reading+2 digits
200V	100mV	±0.5% of reading+2 digits
600V	1V	±0.8% of reading+2 digits

Overload protection: PTC 600V DC or AC RMS.

DC Curren

Range	Resolution	Accuracy
2000μA	1μA	±1% of reading+2 digits
200mA	100μA	±1. 5% of reading+2 digits
10A	10mA	±3% of reading+2 digits

Overload protection: F200mA/250V Fuse F10A/250V Fuse

AC voltage

Range	Resolution	Accuracy
200V	100mV	±1. 2% of reading+10 digits
600V	1V	±1. 2% of reading+10 digits

Overload protection: PTC 600V DC or AC RMS.

Frequency Range: 40Hz to 400Hz.

Display: Average (sine wave RMS).

Resistance

Range	Resolution	Accuracy
200Ω	0. 1Ω	±0.8% of reading+3 digits
2kΩ	1Ω	±0.8% of reading+2 digits
20kΩ	10Ω	±0.8% of reading+2 digits
200kΩ	100Ω	±0.8% of reading+2 digits
20MΩ	10kΩ	±1. 2% of reading+3 digits

Maximum open circuit voltage: 2..4V

Diode and continuity

Range	Description
▶|/•)))	Continuity test and diode measurement are executed in smart mode without the need to press any switching button; when the measured resistance is less than about 30 ohm, it displays the on-resistance value, while the internal buzzer beeps, and the continuity indicator (green LED) lights; When measuring a diode, the approximate diode forward voltage is displayed.

Overload protection: PTC 600V DC or AC RMS

NCV non-contact AC voltage detection

Range	Description
Low field	Display - L, NCV indicator (green LED) lights, and the buzzer gives out the alarm
High field	Display--H, NCV indicator (two red LEDs) lights, and the buzzer gives out the alarm

Battery voltage measurement

Range	Description
1. 5V	The load resistance is about 100, showing the battery voltage value
9V	The load resistance is about 400, showing the battery voltage

Instructions for Use

Cautions before the operation:

1. Turn on the power and check if the battery is under voltage. If "🔋" is displayed on the screen, it is necessary to replace the battery before the operation. Otherwise, follow the steps below.
2. The warning symbol ⚠ next to the probe jack indicates a value that the input voltage or current should not exceed, which is intended for protecting the internal circuit from damage.
3. Before conduct the measurement, the function range switch should be set to the desired range.

DC Voltage Measurement

1. Plug the red probe into the "VmA" jack and the black probe into the "COM" jack.
2. Place the function range switch in the **V⎓** range, and connect the probe to the power or load to be measured. The polarity and measured value of the red probe will be displayed on the screen simultaneously.。

Notes:

1. If you do not know the voltage range to be used, set the function range switch to the maximum range, and then gradually reduce it until you reach a satisfactory resolution.
2. If the display only shows "OL", it means that the measured value has exceeded the range, so you should set the function range switch to a higher range.
3. Do not input a voltage higher than 600V. Although it is possible to display higher voltages, but there is a danger of damaging the internal circuit of the meter.
4. When measuring high voltages, special care must be taken to avoid electric shocks.

AC Voltage Measurement

1. Plug the red probe into the "VmA" jack and the black probe into the "COM" jack.
2. Set the function range switch to V~ range and connect the to the power or load to be measured. The measured value will be displayed on the screen.

Note: For DC voltage measurement, refer to notes 1, 2, 3, and 4.

DC Current Measurement

1. Plug the black probe into the COM jack. When the measured current does not exceed 200 mA, plug the red probe is into the “VmA” jack. When the measured current is between 200mA and 10A, insert the red probe into the 10A jack.
2. Set the function range switch to the desired A range, and connect the probe to the load under test in in series. The current value displayed also indicates the polarity of the red probe.

Notes:

1. If you do not know the voltage range to be used, set the function range switch to the maximum range, and then gradually reduce it until you reach a satisfactory resolution.
2. If the display only shows "OL", it means that the overrange has occurred, and you should set the function range switch to a higher range.
3. The "⚠" symbol next to the probe jack indicates that the maximum input current is 200mA or 10A, which depends on the jack used. Excessive current will cause the fuse being blown.

Resistance Measurement

1. Plug the black probe into the COM jack and the red probe into the "VmA" jack.
2. Set the function range switch to the desired range, and connect the test probe to the resistance under test, and measurement result can be read from the display.

Notes:

1. If the measured resistance value exceeds the maximum value of the selected range, the over range “OL” will be displayed, so you should select a higher range. When the measured resistance is above 1M, it may take a few seconds for the reading to get stabilized. This is normal for high resistance measurements.
2. When there is no input, the meter displays "OL".
3. When checking the online resistance, all power supplies in the circuit under test must be turned off and all capacitors must be fully discharged.

Continuity and diode measurement

1. Plug the black probe into the COM jack and the red probe into the" VmA" jack.
2. Set the function range switch to the continuity and diode field, and connect the probes to both ends of the measured object.
3. If the resistance of the measured object is less than 30, the meter will automatically switch to the continuity field. The indicator (green LED) lights up, and the buzzer sounds, indicating the continuity between the connected points, while the LCD screen displays the resistance value.
4. If the object to be measured is a diode, the meter will automatically switch to the diode field for positive continuity, while the LCD screen displays the approximate forward voltage of the diode. When the diode is open or the polarity is reversed, “OL” is displayed. For silicon PN junctions, the normal value is about 0.5~0.8V.

Notes:

1. When measuring PN junctions online, to avoid damage to the meter and personal injury, all power in the measurement circuit must be turned off, and the residual charge on all capacitors must be discharged before the measurement.
2. When there is no input, the meter displays "OL".

Battery Measurement

1. Plug the black probe into the COM jack and the red probe into the "VmA" jack.
2. Set the function range switch to the relevant measurement range in the battery measurement field. The red probe contacts the “+” terminal of the measured battery and the black probe contacts the “-” terminal, then measure the battery voltage, and get the battery value displayed on the LCD screen.

Notes:

Do not input a voltage more than DC 60V or AC 30V to avoid damage to the meter and personal injury.

Non-contact AC voltage sensing (NCV)

1. Set the function range switch to the NCV field. To determine the presence of an AC voltage or electromagnetic field on the object, place the probe with the mark “NCV” on the front of the meter near the object being measured.
2. When AC voltage is sensed, the screen, NCV indicator and buzzer will indicate the voltage level simultaneously. When the induced voltage is low, the display shows “--L”. The green LED on the left side of the NCV indicator lights up and the buzzer gives out alarm continuously.
3. When the induced voltage is high, the display shows “--H”. The two red LEDs on the right side of the NCV indicator light up and the buzzer gives out alarm continuously at a higher frequency.

Battery and Fuse Replacement

1. Under normal circumstances, it is generally not necessary to replace the fuse. To replace the fuse and power supply, it is necessary to remove the probes and turn off the power. Remove the two screws on the back cover to open the case. The fuse used for the meter has the following specifications: 200mA/250V and 10A/250V fast fusing-off type.
2. The fuse for replacement must have the same specifications.
3. The batteries used in this meter are: Two 1.5V AAA batteries. The batteries for replacement shall have the same specifications.
4. After replacing the battery or fuse, the back cover must be tightened before using the meter.

⚠ Warning

To avoid electric shock, check that the probe has been disconnected from the measured circuit before opening the back cover.

Before using the meter, check that the back cover has been tightened.

Accessories

• User Manual	1 copy
• Probes	1 set
• Packing box	1 set
• 1.5V AAA Battery	2 pieces